Notes: (Unless Otherwise Specified)

1. Waterproof Rate: IP68.
2. Recommend Panel Thickness: 0.8 to 6.0 mm.
3. Recommend Torque: 19~20 Kgf-cm.
4. Mating Cap P/N: GT1C5231X2/GT2C123012.
5. RoHS Compliant.
6. Type C -Pin Out Is The Same As This Drawing.
7. UL Certification file #E364108.

REV	ECN#	DESCRIPTION OF REVISION	DRAW BY DATE	CHECK BY DATE	APPROVE BY DATE
A1	ECN-260717	Design Changes	Lucas 08/04/26	Lucas 08/04/26	Ray 08/04/26

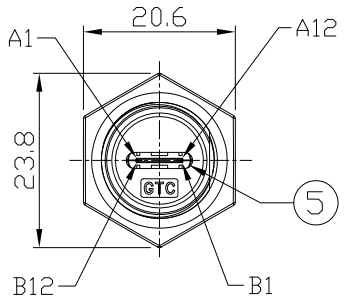

Conn.

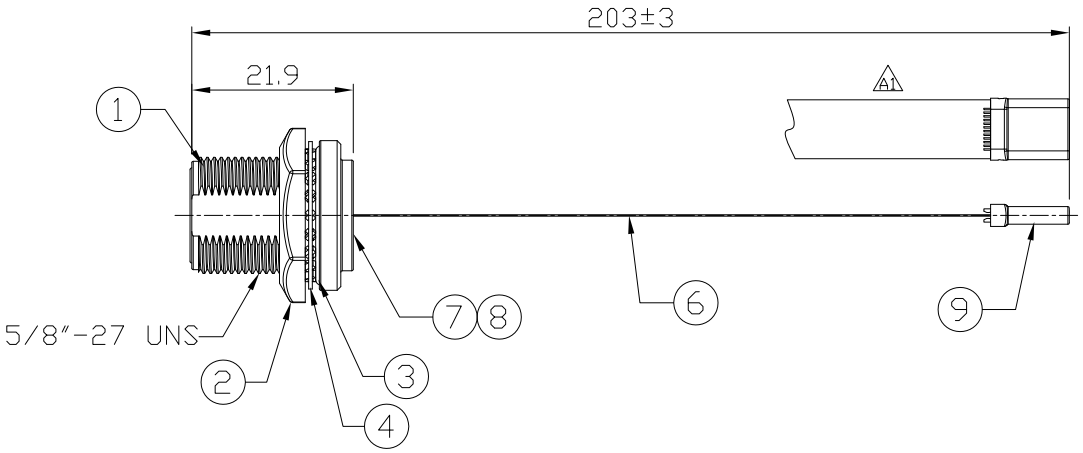

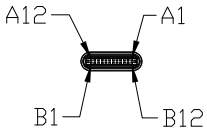

Type C Plug

Item	Part Name	Material / Finish	Q'ty
9	USB Type C 3.1 Male	Housing: Thermoplastic, Color: Black Contacts: Copper Alloy, Finish: Au Plated Shell: Stainless Steel, Finish: Ni Plated	1
8	EMI Shielded Plate	Copper Alloy Finish: Ni Plated	1
7	Glue	Epoxy Color: Black	
6	FPC	FPC	
5	USB Type C 3.1 Female	Housing: Thermoplastic, Color: Black Contacts: Copper Alloy, Finish: Au Plated Shell: Stainless Steel, Finish: Ni Plated	1
4	Metal Washer	SUS Finish:-	1
3	O-Ring	Silicone Color: Red	1
2	Hex Nut	Zn Alloy Finish: Ni Plated	1
1	Housing	Zn Alloy Finish: Ni Plated	1

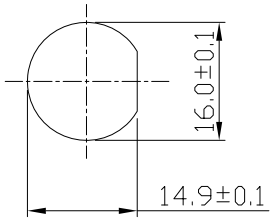

Front View
Recommend
Panel Cut-Out

Conn. PIN OUT Type C Plug

Conn.	Type C Plug
A4,B4,A9,B9	A4,B4,A9,B9
SHELL ,A1,B1,A12,B12	SHELL ,A1,B1,A12,B12
A2	A2
A3	A3
A5	A5
A6,B6	A6,B6
A7,B7	A7,B7
A8	A8
A10	A10
A11	A11
B2	B2
B3	B3
B5	B5
B8	B8
B10	B10
B11	B11

GTC
DOC.CENTER.ISSUE
AUG.04.2026
ONLY FOR RELEASE

TITLE	DRAWING NUMBER	REV.
USB 3.1 Type C Metal C2 Panel Jack Screw With Type C Plug	GT21C300-CS-FPC-Z2	A1

DO NOT SCALE DRAWINGS	B	1:1	Lucas 03/25/26	Lucas 03/25/26	Ray 03/25/26	X.X ± 0.5 X.XXX ± 0.05 X.XX ± 0.2 ANGLES ± 1°	mm	1/1
THIRD ANGLE PROJECTION	SIZE	SCALE	DRAW / DATE	CHECK / DATE	APPROVE / DATE	TOLERANCES	UNIT	SHEET

GT Contact CO.,LTD

NOTICE OF PROPRIETARY PROPERTY:

THE INFORMATION CONTAINED HEREIN IS THE PROPRIETARY PROPERTY OF GT Contact CO.,LTD THE POSSESSOR AGREES TO THE FOLLOWING:
(i) TO MAINTAIN THIS DOCUMENT IN CONFIDENCE
(ii) NOT TO REPRODUCE OR COPY IT
(iii) NOT TO REVEAL OR PUBLISH IT IN WHOLE OR PART
(iv) ALL RIGHTS RESERVED