Notes: (Unless Otherwise Specified)

1. Waterproof Rate: IP68.
2. Recommend Panel Thickness: 0.8 to 6.0 mm.
3. Recommend Torque: 19~20 Kgf-cm.
4. Mating Cap P/N: GT1C5231X2/GT2C123012.
5. RoHS Compliant.
6. Type C -Pin Out Is The Same As This Drawing.
7. UL Certification file #E364108.

REV	ECN#	DESCRIPTION OF REVISION	DRAW BY DATE	CHECK BY DATE	APPROVE BY DATE
A0	ECN-260716	Design Changes	Lucas 07/31/26	Lucas 07/31/26	Ray 07/31/26

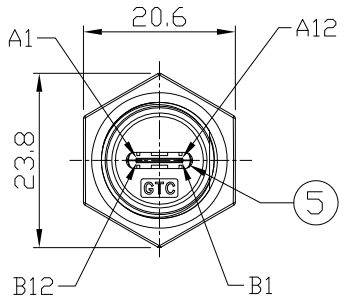

Conn.

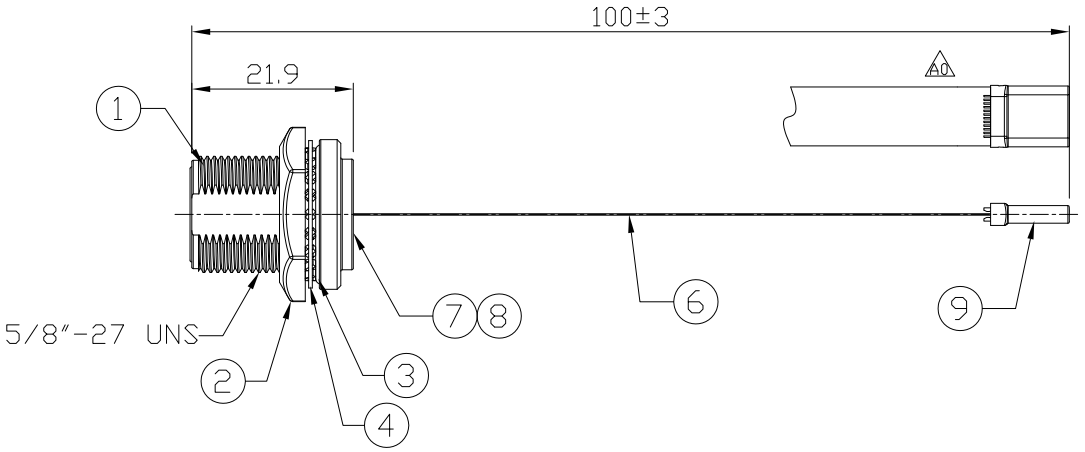

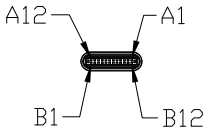

Type C Plug

Item	Part Name	Material / Finish	Q'ty
9	USB Type C 3.1 Male	Housing: Thermoplastic, Color: Black Contacts: Copper Alloy, Finish: Au Plated Shell: Stainless Steel, Finish: Ni Plated	1
8	EMI Shielded Plate	Copper Alloy Finish: Ni Plated	1
7	Glue	Epoxy Color: Black	
6	FPC	FPC	
5	USB Type C 3.1 Female	Housing: Thermoplastic, Color: Black Contacts: Copper Alloy, Finish: Au Plated Shell: Stainless Steel, Finish: Ni Plated	1
4	Metal Washer	SUS Finish:-	1
3	O-Ring	Silicone Color: Red	1
2	Hex Nut	Zn Alloy Finish: Ni Plated	1
1	Housing	Zn Alloy Finish: Ni Plated	1

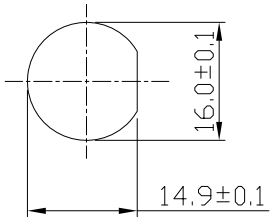

Front View
Recommend
Panel Cut-Out

Conn. PIN OUT Type C Plug

Conn.		Type C Plug
A4,B4,A9,B9		A4,B4,A9,B9
SHELL ,A1,B1,A12,B12		SHELL ,A1,B1,A12,B12
A2		A2
A3		A3
A5		A5
A6,B6		A6,B6
A7,B7		A7,B7
A8		A8
A10		A10
A11		A11
B2		B2
B3		B3
B5		B5
B8		B8
B10		B10
B11		B11

GTC
DOC.CENTER.ISSUE
JUL.31.2026
ONLY FOR RELEASE

TITLE: USB 3.1 Type C Metal C2 Panel Jack Screw With Type C Plug

DRAWING NUMBER: GT21C300-CS-FPC-Z1 REV. A0

DO NOT SCALE DRAWINGS	B	1:1	Lucas 06/25/26	Lucas 06/25/26	Ray 06/25/26	X.X ± 0.5 X.XXX ± 0.05 X.XX ± 0.2 ANGLES ± 1°	mm	1/1
THIRD ANGLE PROJECTION	SIZE	SCALE	DRAW / DATE	CHECK / DATE	APPROVE / DATE	TOLERANCES	UNIT	SHEET

GT Contact CO.,LTD

NOTICE OF PROPRIETARY PROPERTY:

THE INFORMATION CONTAINED HEREIN IS THE PROPRIETARY PROPERTY OF GT Contact CO.,LTD THE POSSESSOR AGREES TO THE FOLLOWING:
(i) TO MAINTAIN THIS DOCUMENT IN CONFIDENCE
(ii) NOT TO REPRODUCE OR COPY IT
(iii) NOT TO REVEAL OR PUBLISH IT IN WHOLE OR PART
(iv) ALL RIGHTS RESERVED