Notes: (Unless Otherwise Specified)

1. Waterproof Rate : IP67.
2. Recommend Panel Thickness : 0.8 to 3.0 mm.
3. Recommend Torque: 9~10 Kgf-cm.
4. Mating Cap P/N: GT1C1210X2.
5. RoHS Compliant.
6. UL Certification file #E364108.
7. Type C -Pin Out Is The Same As This Drawing.

REV	ECN#	DESCRIPTION OF REVISION	DRAW BY DATE	CHECK BY DATE	APPROVE BY DATE
A0	ECN-260716	Design Changes	Lucas 07/31/26	Lucas 07/31/26	Ray 07/31/26

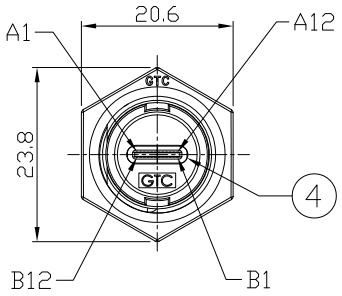

Conn.

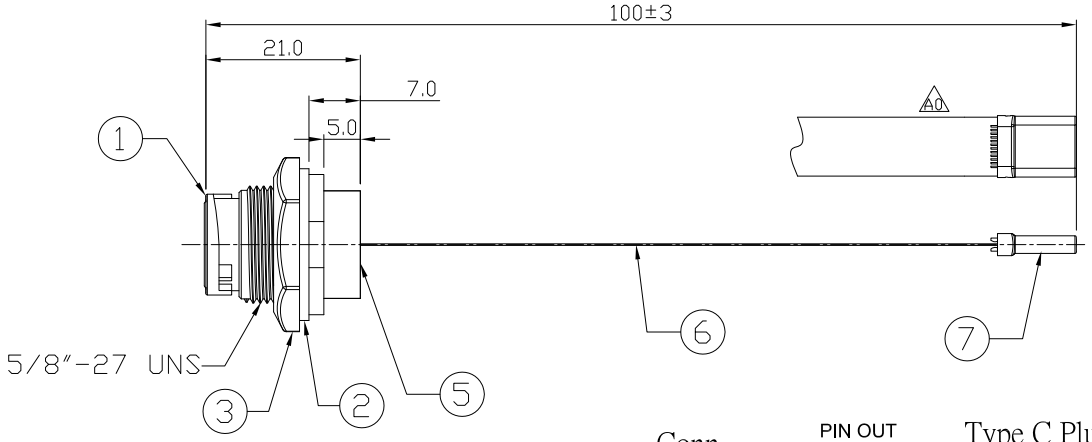

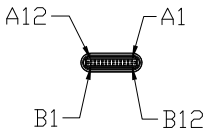

Type C Plug

Item	Part Name	Material / Finish	Q'ty
7	USB Type C 3.1 Male	Housing: Thermoplastic, Color: Black Contacts: Copper Alloy, Finish: Au Plated Shell: Stainless Steel, Finish: Ni Plated	1
6	FPC	FPC	1
5	Glue	Epoxy Color: Black	
4	USB Type C 3.1 Female	Housing: Thermoplastic, Color: Black Contacts: Copper Alloy, Finish: Au Plated Shell: Stainless Steel, Finish: Ni Plated	1
3	Hex Nut	Thermoplastic Color: Black	1
2	Gasket	Silicone Color: Black	1
1	Housing	Thermoplastic Color: Black	1

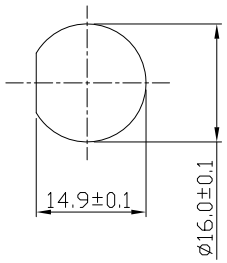

Recommend Panel Cut-Out

Conn. PIN OUT Type C Plug

Conn.	Type C Plug
A4,B4,A9,B9	A4,B4,A9,B9
SHELL ,A1,B1,A12,B12	SHELL ,A1,B1,A12,B12
A2	A2
A3	A3
A5	A5
A6,B6	A6,B6
A7,B7	A7,B7
A8	A8
A10	A10
A11	A11
B2	B2
B3	B3
B5	B5
B8	B8
B10	B10
B11	B11

GTC
DOC.CENTER.ISSUE
JUL.31.2026
ONLY FOR RELEASE

TITLE: USB 3.1 Type C Plastic C2 Panel Jack Lock With Type C Plug

DRAWING NUMBER: GT11C200-CS-FPC-Z1

REV.: A0

DO NOT SCALE DRAWINGS	SIZE	SCALE	DRAW / DATE	CHECK / DATE	APPROVE / DATE	TOLERANCES	UNIT	SHEET
THIRD ANGLE PROJECTION	B	1:1	Lucas 06/25/26	Lucas 06/25/26	Ray 06/25/26	X.X ± 0.5 X.XXX ± 0.05 X.XX ± 0.2 ANGLES ± 1°	mm	1/1

GT Contact CO.,LTD

NOTICE OF PROPRIETARY PROPERTY:

THE INFORMATION CONTAINED HEREIN IS THE PROPRIETARY PROPERTY OF GT Contact CO.,LTD THE POSSESSOR AGREES TO THE FOLLOWING:
(i) TO MAINTAIN THIS DOCUMENT IN CONFIDENCE
(ii) NOT TO REPRODUCE OR COPY IT
(iii) NOT TO REVEAL OR PUBLISH IT IN WHOLE OR PART
(iv) ALL RIGHTS RESERVED