嘉尼企業股份有限公司CANAL ELECTRONIC CO.,LTD.

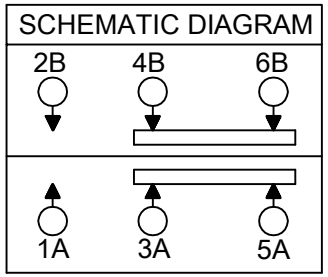

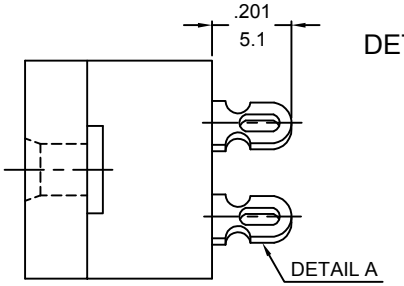

DETAIL A:TERMINAL,
thickness:0.8±0.03mm

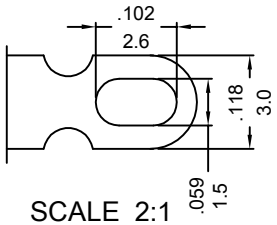

SCALE 2:1

SLIDE SWITCH MODEL SL14

RATING:12A 125/250VAC (UL/CUL)
10A 250VAC (CQC)
8(2)A 125/250V~ μT85/55 (cURus/ENEC15)
CONTACT RESISTANCE: 20mΩ INITIAL (MAX)
INSULATION RESISTANCE:DC 500V 100MΩ(MIN)
DIELECTRIC STRENGTH:1,000VAC FOR 1 MINUTE

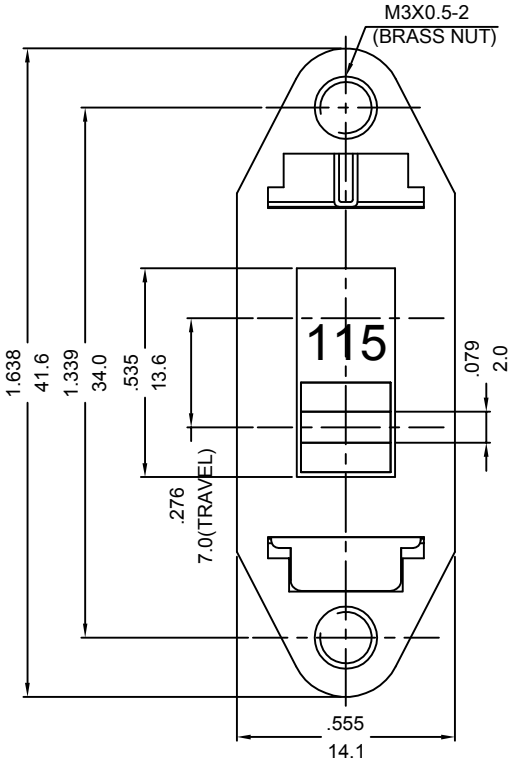

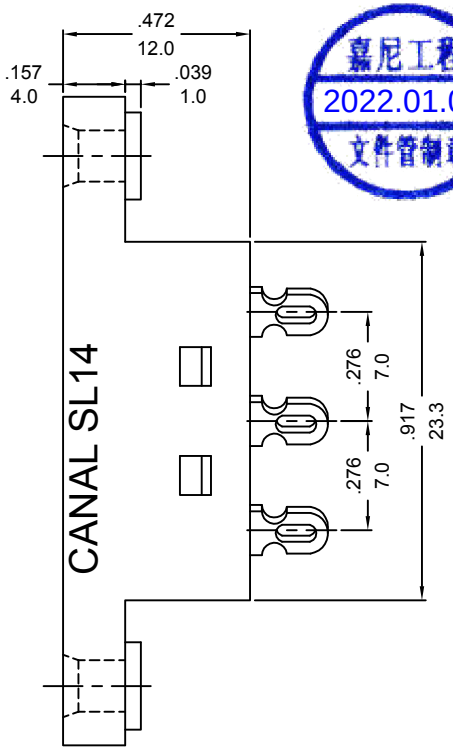

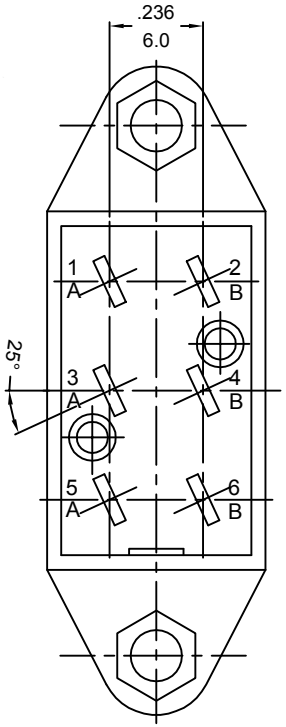

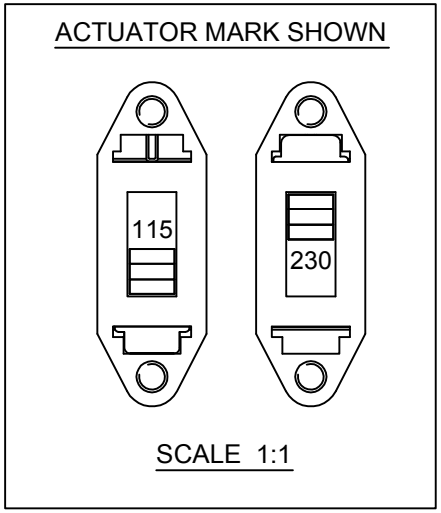

嘉尼工程
2022.01.05
文件管制章

NOTE:TOLERANCES UNLESS OTHERWISE SPECIFIED:± .012/0.3 (in/mm)

REVISION	DESCRIPTION	REVISED BY	TOLERANCES				ANGLE ½°	UNIT	mm	PART NAME	SL14 SPEC DRAWING	DWG NO
8 2022.01.05	導入UL61058-1&ENEC15	楊偉韶	DRAWN BY	余龍	DESIGNED BY	余龍	SCALE	2/1				S0813H
7 2012.11.07	取消CSA,重新出圖	袁友軍										
6 2011.09.05	依最新出圖要求，整理出圖	向 宏	CHECKED BY		APPROVED BY		DATE	2004.12.31		PART NO	SL14-22AM(1A)NC	
5 2009.09.15	整理圖面，重新出圖	向 宏										