嘉尼企業股份有限公司CANAL ELECTRONIC CO.,LTD.

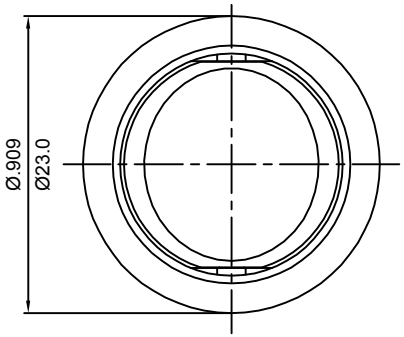

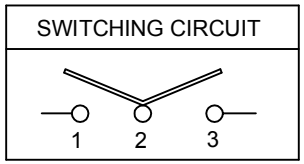

ROCKER SWITCH MODEL MR2 SERIES

RATING:16(8)A 125/250V~T125/55(cURus/ENEC15)
16(8)A 250V~ T85 (CQC)
DIELECTRIC VOLTAGE-WITHSTAND:1500VAC FOR 1 MINUTE
INSULATION RESISTANCE: 500VDC 100M Ω (MIN.)
CONTACT RESISTANCE:20mΩ INITIAL (MAX.)

嘉尼工程
2023.12.12
文件管制章

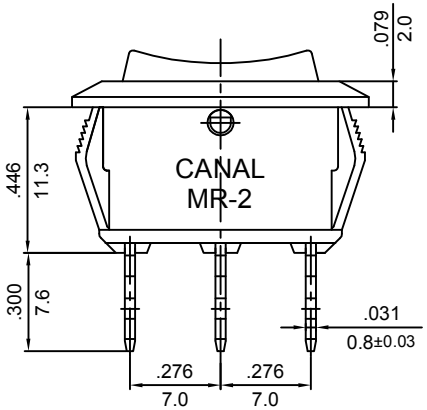

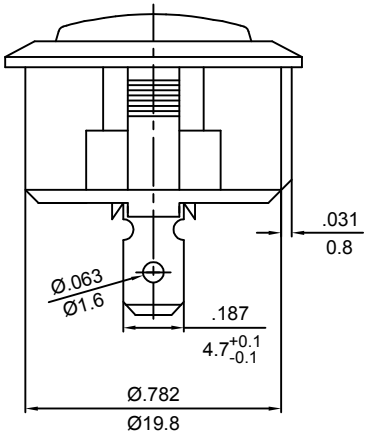

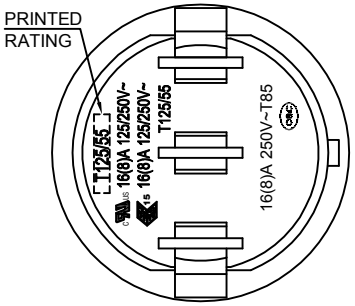

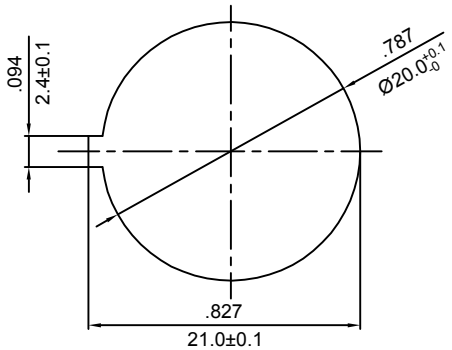

PANEL CUTOUT DIMENSION TABLE

NOTE:TOLERANCES UNLESS OTHERWISE SPECIFIED:\M+00000012/0.3 (in/mm)

REVISION	DESCRIPTION	REVISED BY	TOLERANCES				ANGLE ½°	UNIT	mm	PART NAME	MR2 SPEC DRAWING	DWG NO
4			DRAWN BY	楊偉韶	DESIGNED BY	蔡劍	SCALE	5/3				S9599A
3												
2			CHECKED BY		APPROVED BY		DATE	2023.12.11		PART NO	MR2-130R2N-NBB2-2BNC	
1 2023.12.11	首次出圖	楊偉韶										