# 嘉尼企業股份有限公司CANAL ELECTRONIC CO.,LTD.

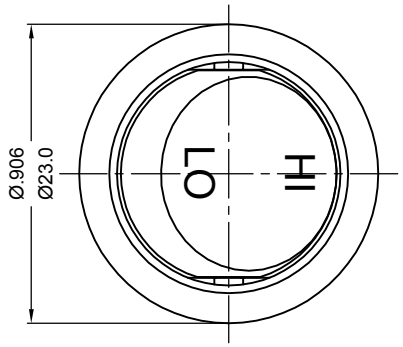


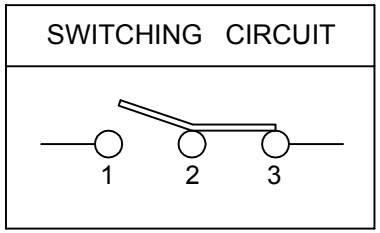


## ROCKER SWITCH MODEL MR2 SERIES

RATING:16(8)A 125/250V~ (cURus / ENEC15)
16(8)A 250V~ T85 (CQC)
DIELECTRIC VOLTAGE-WITHSTAND:1500VAC FOR 1 MINUTE
INSULATION RESISTANCE: 500VDC 100MΩ (MIN.)
CONTACT RESISTANCE:20mΩ INITIAL (MAX.)

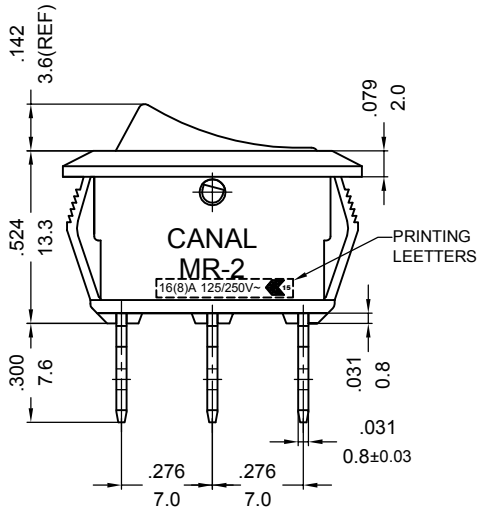


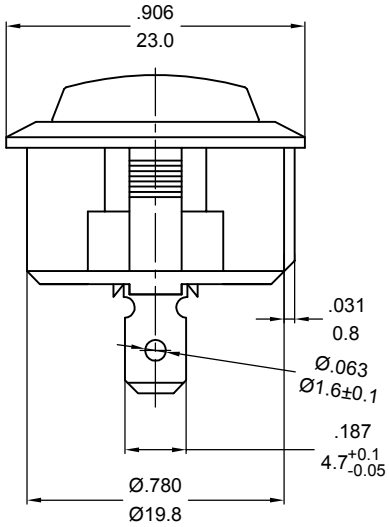


嘉尼工程
2021.10.11
文件管制章

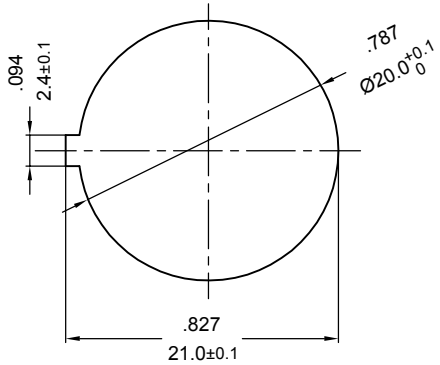


PANEL CUTOUT DIMENSION TABLE

NOTES: TOLERANCES UNLESS OTHERWISE SPECIFIED:±.012/0.3(in/mm)

| REVISION | DESCRIPTION | REVISED BY | TOLERANCES | | | | ANGLE ½° | UNIT | mm | PART NAME | MR2 SPEC DRAWING | DWG NO |
|---|---|---|---|---|---|---|---|---|---|---|---|---|
| 4 | | | DRAWN BY | 楊偉韶 | DESIGNED BY | 蔡劍 | SCALE | 5/3 | | | | S8618A |
| 3 | | | | | | | | | | | | |
| 2 | | | CHECKED BY | | APPROVED BY | | DATE | 2021.10.11 | | PART NO | MR2-120R1W-NBBB-2BNC | |
| 1 2021.10.11 | 首次出圖 | 楊偉韶 | | | | | | | | | | |