嘉尼企業股份有限公司CANAL ELECTRONIC CO.,LTD.

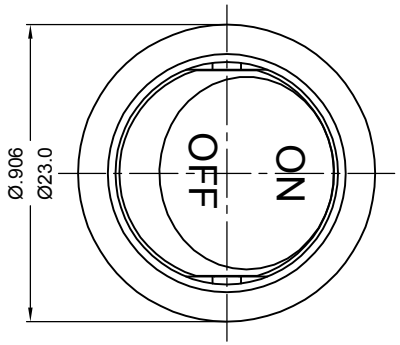

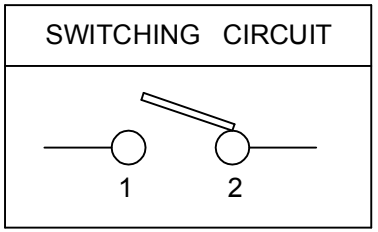

ROCKER SWITCH MODEL MR2 SERIES

RATING:16A 30VDC(cURus/ENEC15)
16(8)A 250V~ T85 (CQC)
DIELECTRIC VOLTAGE-WITHSTAND:1500VAC FOR 1 MINUTE
INSULATION RESISTANCE: 500VDC 100MΩ (MIN.)
CONTACT RESISTANCE:20mΩ INITIAL (MAX.)

嘉尼工程
2023.11.07
文件管制章

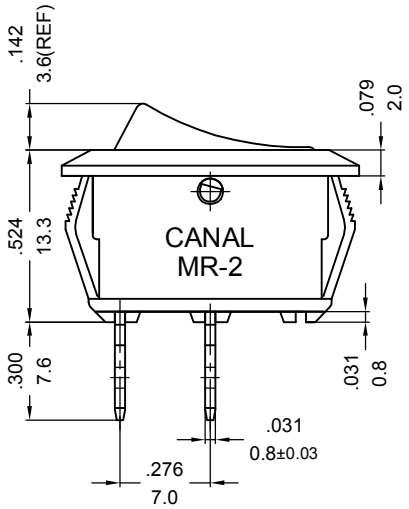

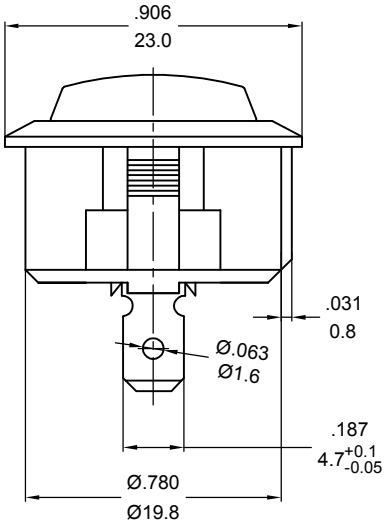

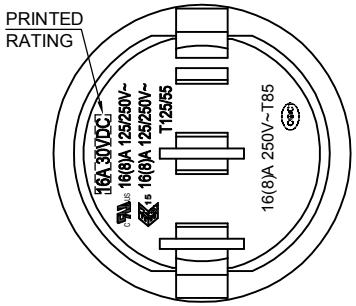

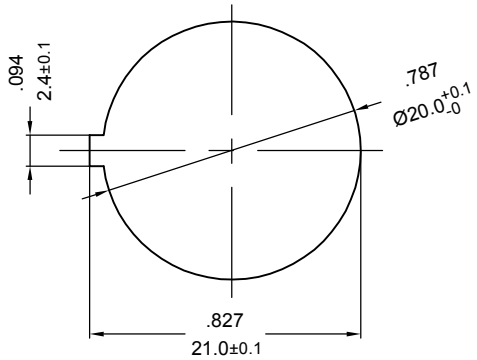

PANEL CUTOUT DIMENSION TABLE

NOTES:TOLERANCES UNLESS OTHERWISE SPECIFIED:±.012/0.3(in/mm)

REVISION	DESCRIPTION	REVISED BY	TOLERANCES			ANGLE ½°	UNIT	mm	PART NAME	MR-2 SPEC DRAWING	DWG NO
4			DRAWN BY	杨伟韶	DESIGNED BY	蔡剑	SCALE	5/3			S9566A
3											
2			CHECKED BY		APPROVED BY		DATE	2023.11.07	PART NO	MR2-110R3W-NBBD-2BNC	
1 2023.11.07	首次出图	杨伟韶									