嘉尼企業股份有限公司CANAL ELECTRONIC CO.,LTD.

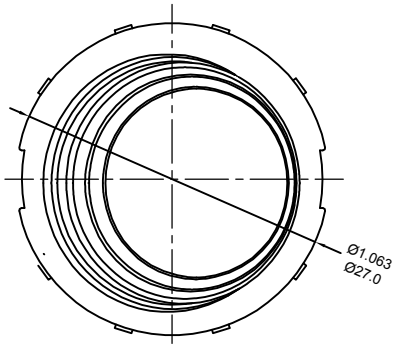

SWITCH CIRCUIT APPLICATION

SPST
Pole on/off illuminated

ROCKER SWITCH MODEL MR2 SERIES

RATING:16(8)A 125/250V~ (cURus/ENEC15)
DIELECTRIC VOLTAGE-WITHSTAND:1,500VAC FOR 1 MINUTE
INSULATION RESISTANCE:DC 500V 100MΩ (MIN.)
CONTACT RESISTANCE:20mΩ INITIAL (MAX.)
ILLUMINATED:200~250VAC
WATERPROOF GRADE: IP68 (ABOVE THE PANEL)

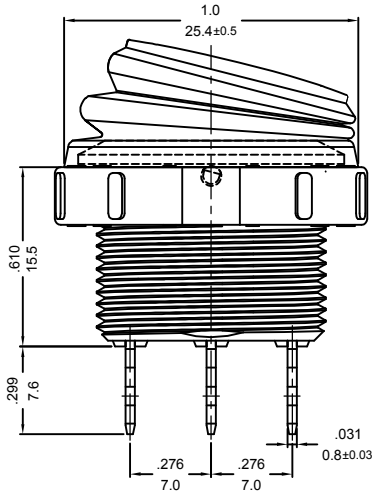

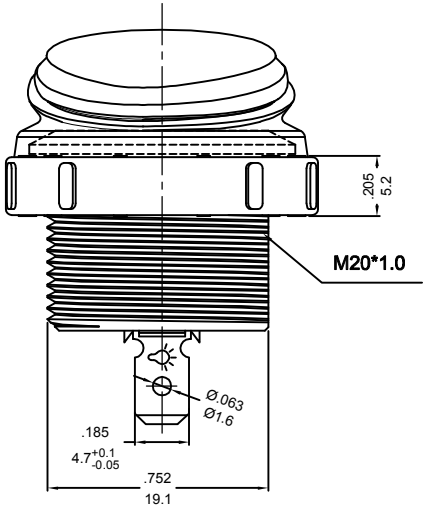

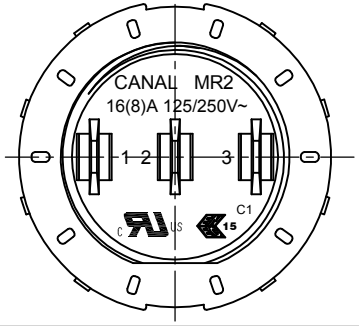

嘉尼工程
2023.06.14
文件管制章

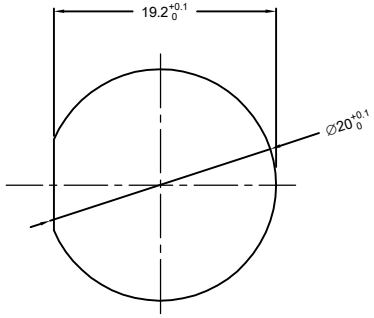

PANEL THICKNESS:1.0~3.0mm

NOTE:TOLERANCES UNLESS OTHERWISE SPECIFIED:± .012/0.3 (in/mm)

REVISION	DESCRIPTION	REVISED BY	TOLERANCES				ANGLE ½°	UNIT	mm	PART NAME	MR-2 SPEC DRAWING	DWG NO
4			DRAWN BY	达志各	DESIGNED BY	蔡剑	SCALE	2/1				S9027B
3												
2 2023.06.13	依实物修正图面	杨伟韶	CHECKED BY		APPROVED BY		DATE	2022.10.19		PART NO	MR2-110R2N-GBRQ-2ERC	
1 2022.10.19	首次出图	达志各										