# 嘉尼企業股份有限公司CANAL ELECTRONIC CO.,LTD.

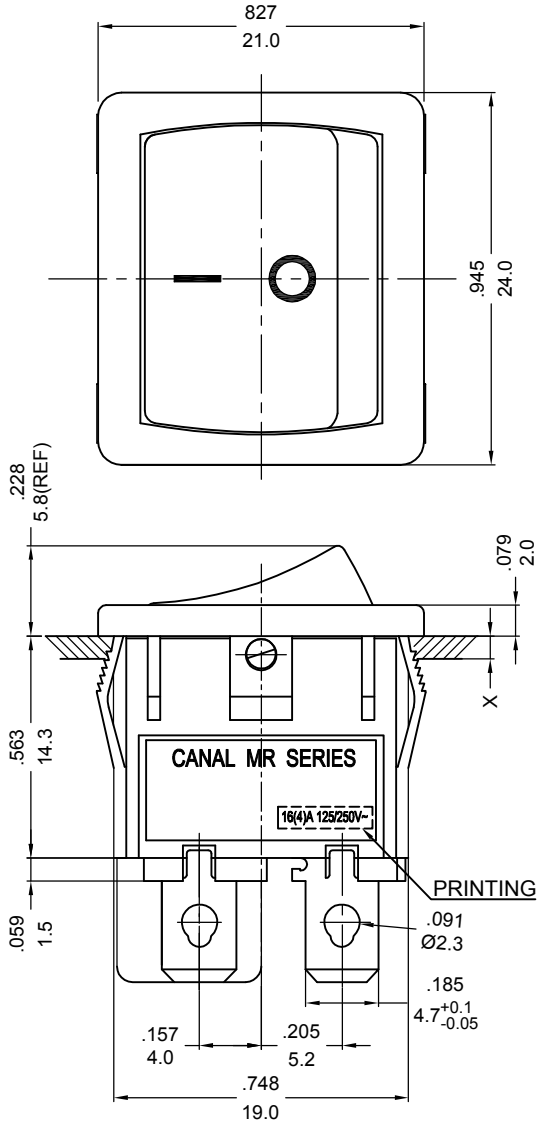


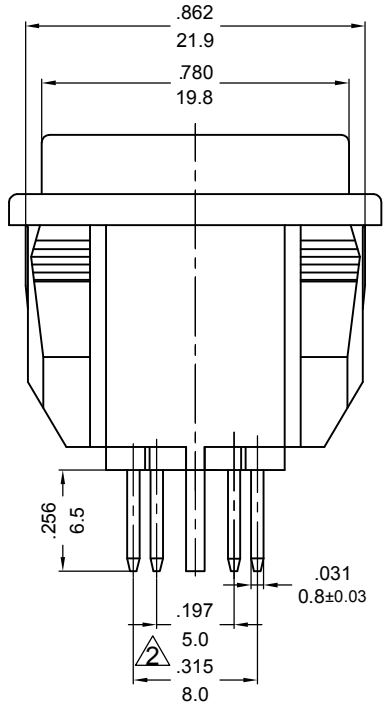


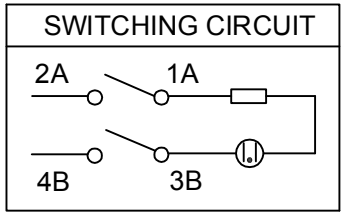


ROCKER SWITCH MODEL:MR SERIES

RATING:12(4)A 125/250V~ (cURus/ENEC 15)
16(4)A 125/250V~ (cURus/ENEC15)
10(4)A 250V~ T125/55 (CQC)

DIELECTRIC WITHSTAND VOLTAGE:1500VAC FOR 1 MINUTE

INSULATION RESISTANCE:500VDC 100MΩ (MIN.)

CONTACT RESISTANCE: 20mΩ INITIAL (MAX.)

ILLUMINATED:100~110VAC

嘉尼工程 2023.12.26 文件管制章

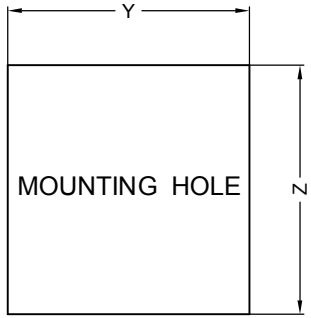


| X=PANEL THICKNESS | Y | Z |
|---|---|---|
| 0.8~1.2mm | 19.2 $^{+0.1}_{-0}$ mm | 21.9 $^{+0.1}_{-0}$ mm |
| 1.3~2.0mm | 19.4 $^{+0.1}_{-0}$ mm | 21.9 $^{+0.1}_{-0}$ mm |
| 2.1~3.0mm | 19.8 $^{+0.1}_{-0}$ mm | 21.9 $^{+0.1}_{-0}$ mm |

PANEL CUTOUT DIMENSION TABLE

NOTE: TOLERANCES UNLESS OTHERWISE SPECIFIED: ± .012/0.3 (in/mm)

| REVISION | DESCRIPTION | REVISED BY | TOLERANCES | | | | ANGLE ½° | UNIT | mm | PART NAME | MR SPEC DRAWING | DWG NO |
|---|---|---|---|---|---|---|---|---|---|---|---|---|
| 4 | | | DRAWN BY | 楊偉韶 | DESIGNED BY | 蔡 劍 | SCALE | 2/1 | | | | S8999B |
| 3 | | | | | | | | | | | | |
| 2 2023.12.22 | 依实物修正尺寸 | 楊偉韶 | CHECKED BY | | APPROVED BY | | DATE | 2022.09.16 | | PART NO | MR-211C5W-LBRC-1PNC | |
| 1 2022.09.16 | 首次出图 | 楊偉韶 | | | | | | | | | | |