# 嘉尼企業股份有限公司CANAL ELECTRONIC CO.,LTD.

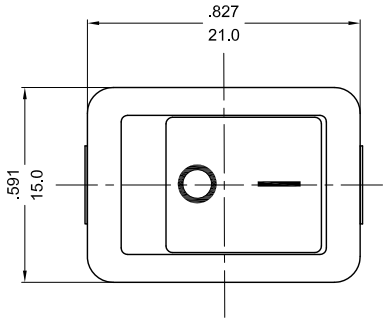


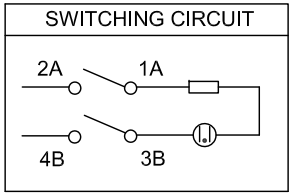


## ROCKER SWITCH MODEL:MR SERIES

RATING:12(4)A 125/250V~ (cURus/ENEC15)
10(4)A 250V~T125/55(CQC)
DIELECTRIC WITHSTAND VOLTAGE:1500VAC FOR 1 MINUTE
INSULATION RESISTANCE:DC 500V 100MΩ (MIN)
CONTACT RESISTANCE: 20mΩ INITIAL (MAX)
ILLUMINATED100~125VAC

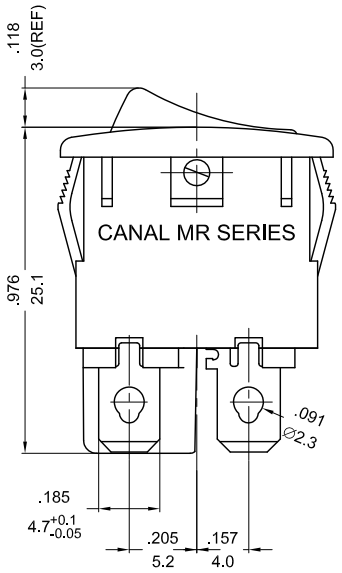


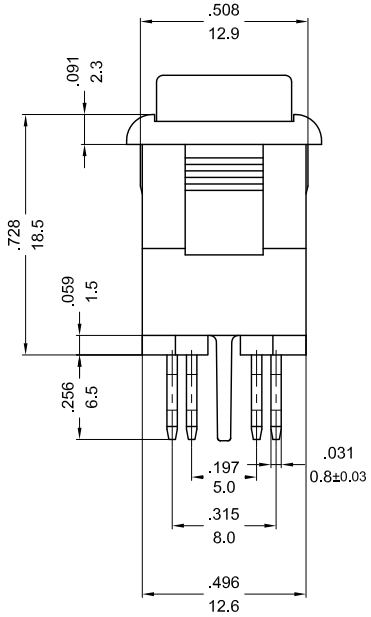


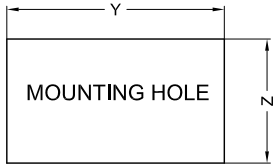


| X(PANEL THICKNESS) | Y(CUTOUT DIMENSION) | Z(CUTOUT DIMENSION) |
|---|---|---|
| 0.75~1.25mm | $19.2^{+0.1}_{-0}$ mm | $12.90^{+0.15}_{-0}$ mm |
| 1.25~2 mm | $19.4^{+0.1}_{-0}$ mm | $12.90^{+0.15}_{-0}$ mm |
| 2~3 mm | $19.8^{+0.1}_{-0}$ mm | $12.90^{+0.15}_{-0}$ mm |

PANEL CUTOUT DIMENSION TABLE

NOTE: TOLERANCES UNLESS OTHERWISE SPECIFIED:±.012/0.3 (in/mm)

| REVISION | DESCRIPTION | REVISED BY | TOLERANCES | | | | ANGLE ½° | UNIT | mm | PART NAME | MR SPEC DRAWING | DWG NO |
|---|---|---|---|---|---|---|---|---|---|---|---|---|
| 4 | | | DRAWN BY | 郭洋 | DESIGNED BY | 蔡劍 | SCALE | 5/3 | | | | S5109A |
| 3 | | | | | | | | | | | | |
| 2 | | | CHECKED BY | 2013.03.25 15:14:37 +08'00' | APPROVED BY | 2013.03.25 15:14:46 +08'00' | DATE | 2013.03.07 | | PART NO | MR-211C5W-LBRB-1LNC | |
| 1 2013.03.07 | 依UL61058-1首次出圖 | 郭洋 | | | | | | | | | | |