嘉尼企業股份有限公司CANAL ELECTRONIC CO.,LTD.

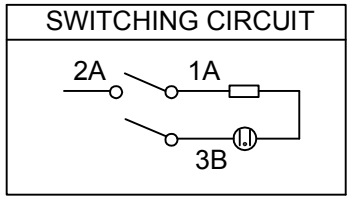

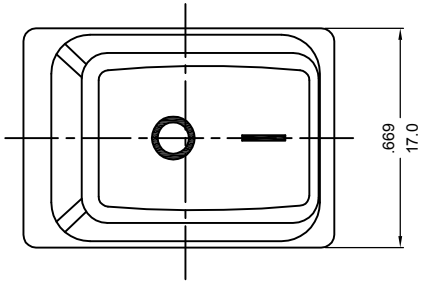

ROCKER SWITCH MODEL:MR SERIES

RATING:12(4)A 125/250V~T55(cURus / ENEC15)
10(4)A 250V~ T125/55 (CQC)
DIELECTRIC WITHSTAND VOLTAGE:1500VAC FOR 1 MINUTE
INSULATION RESISTANCE:500VDC 100M Ω (MIN.)
CONTACT RESISTANCE: 20mΩ INITIAL (MAX.)
ILLUMINATION:200~250VAC

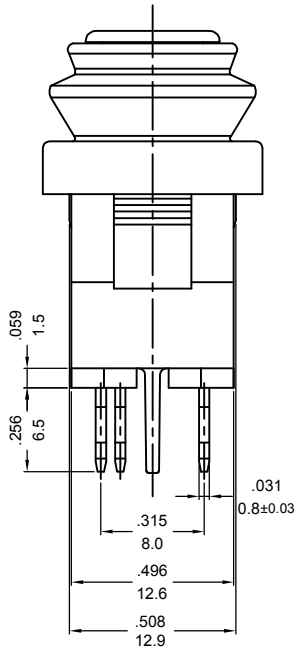

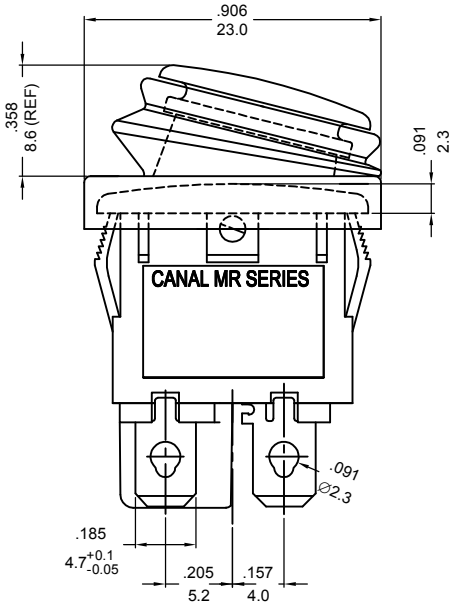

嘉尼工程
2023.05.17
文件管制章

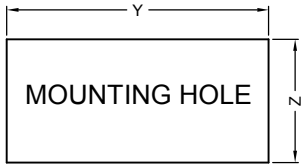

X(PANEL THICKNESS)	Y(CUTOUT DIMENSION)	Z(CUTOUT DIMENSION)
0.75~1.25mm	$19.2^{+0.1}_{-0}$ mm	$12.90^{+0.15}_{-0}$ mm
1.25~2 mm	$19.4^{+0.1}_{-0}$ mm	$12.90^{+0.15}_{-0}$ mm
2~3 mm	$19.8^{+0.1}_{-0}$ mm	$12.90^{+0.15}_{-0}$ mm

PANEL CUTOUT DIMENSION TABLE

NOTE: TOLERANCES UNLESS OTHERWISE SPECIFIED:±.012/0.3 (in/mm)

REVISION	DESCRIPTION	REVISED BY	TOLERANCES				ANGLE ½°	UNIT	mm	PART NAME	MR SPEC DRAWING	DWG NO
4			DRAWN BY	周俊	DESIGNED BY	周俊	SCALE	5/3				S9260A
3												
2			CHECKED BY		APPROVED BY		DATE	2023.04.17		PART NO	MR-111C5W-GBRP-1LGC	
1 2023.04.17	首次出圖	周俊										