嘉尼企業股份有限公司CANAL ELECTRONIC CO.,LTD.

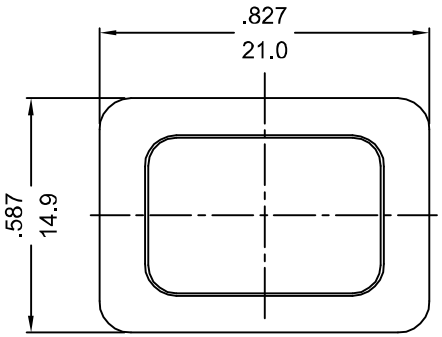

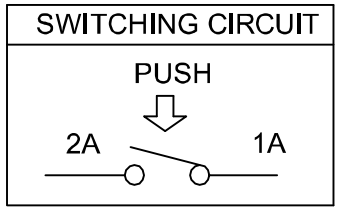

SPECIFICATION MODEL :"PS-5" SERIES

RATING:16A 125/250VAC (UL/CUL)
16(4)A 250V~ T125/55(VDE/ENEC,CQC)
WITHSTAND VOLTAGE:1,000VAC 1 MINUTE
CONTACT RESISTANCE:20mΩ INITIAL (MAX),
INSULATION RESISTANCE:500VDC - 100MΩ (MIN).

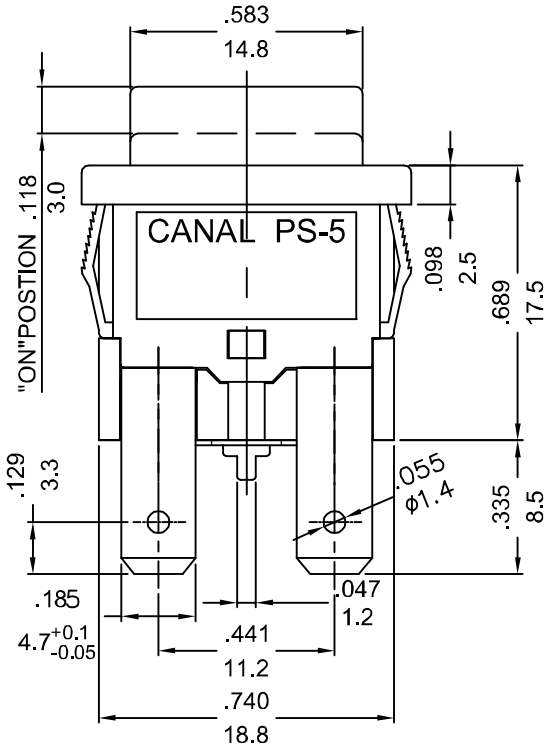

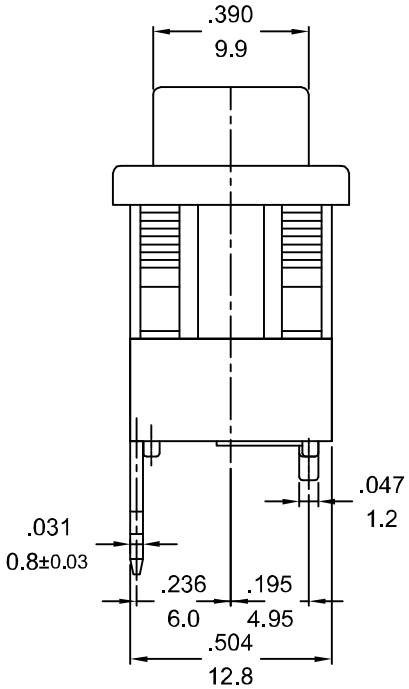

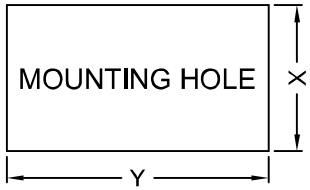

X=panel thickness	Dim.Y	Dim.z
0.75~1.25mm	$19.2^{+0}_{-0.1}$mm	$12.9^{+0.15}_{-0}$ mm
1.25~2mm	$19.4^{+0}_{-0.1}$mm	$12.9^{+0.15}_{-0}$ mm
2~3mm	$19.8^{+0}_{-0.1}$mm	$12.9^{+0.15}_{-0}$ mm

NOTE:TOLERANCES UNLESS OTHERWISE SPECIFIED:±.012/0.3 (in/mm)

REVISION	DESCRIPTION	REVISED BY	TOLERANCES				ANGLE ½°	UNIT mm	PART NAME	PS-5 SPEC DRAWING	DWG NO
4			DRAWN BY	達志各	DESIGNED BY	蔡劍	SCALE	2/1			S6168A
3											
2			CHECKED BY	蔡劍	APPROVED BY	蔡劍	DATE	2015.08.10	PART NO	PS-5-110-KNBB-SB1（new）	
1 2015.08.10	首次出圖	達志各									