嘉尼企業股份有限公司CANAL ELECTRONIC CO.,LTD.

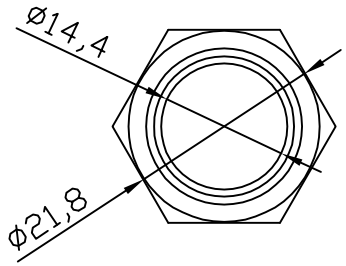

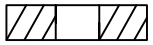

Panel thickness: : 8mm MAX

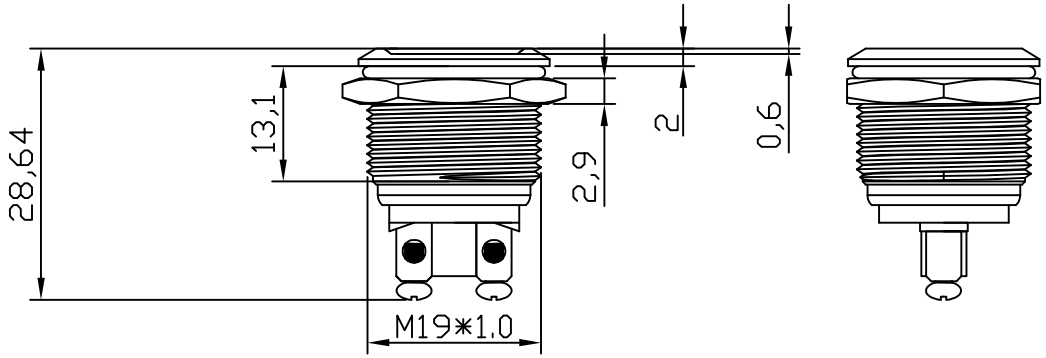

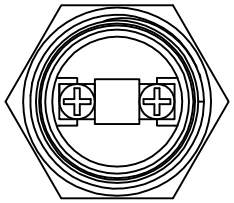

嘉尼工程
2023.12.14
文件管制章

Name	M19 Metal Indicator
Shell Material	stainless steel
Mounting size	19mm
IP Level	IP67
Opertating Temperature	-40~+85℃
Illumination Color	GREEN
Illumination Life	40000 Hours
Illumination Voltage	3V

NOTE:TOLERANCES UNLESS OTHERWISE SPECIFIED: ± 0.5mm

REVISION	DESCRIPTION	REVISED BY	TOLERANCES				ANGLE ½°	UNIT	mm	PART NAME	AD SPEC DRAWING	DWG NO
4			DRAWN BY	蔡宁燕	DESIGNED BY	蔡剑	SCALE	2/1				WS1584A
3												
2			CHECKED BY		APPROVED BY		DATE	2023.12.12		PART NO	AD19SC-10G3V	
1 2023.12.12	首次出圖	蔡宁燕										