嘉尼企業股份有限公司CANAL ELECTRONIC CO.,LTD.

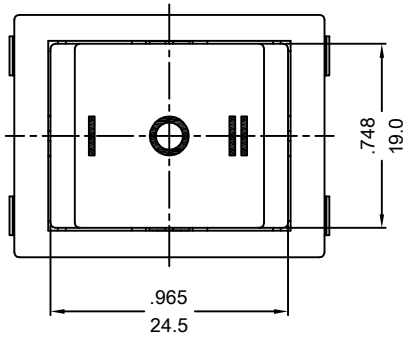

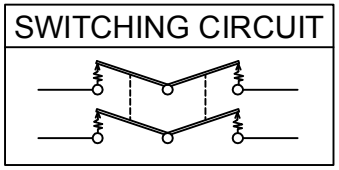

ROCKER SWITCH MODEL: RH SERIES
RATING:16(4)A 125/250V~ (cURus/ENEC15)
16(4)A 250V~ μT85/55 (CQC)
DIELECTRIC WITHSTAND VOLTAGE:1500VAC 1 MINUTE
INSULATION RESISTANCE:500VDC 100MΩ (MIN)
CONTACT RESISTANCE:20mΩ INITIAL (MAX.)

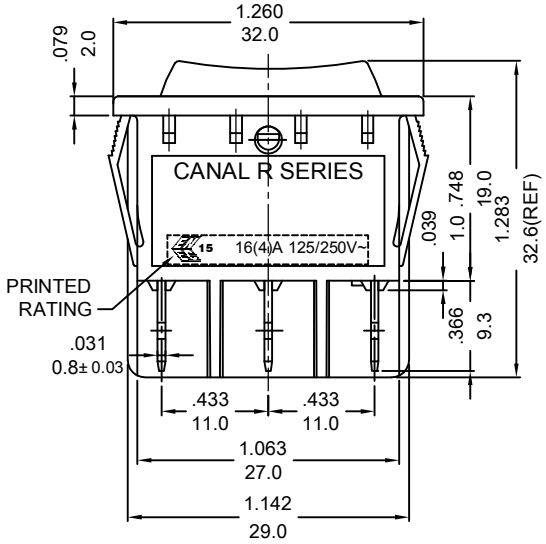

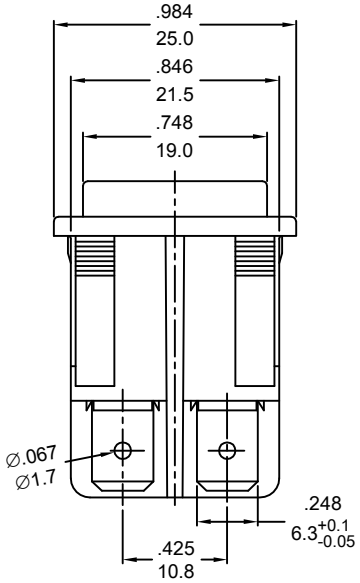

嘉尼工程
2020.07.24
文件管制章

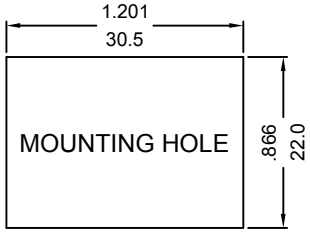

X=(0.75 TO 1.25mm)
PANEL THICKNESS

NOTE: TOLERANCES UNLESS OTHERWISE SPECIFIED: ± .012/0.3 (in/mm)

REVISION	DESCRIPTION	REVISED BY	TOLERANCES		ANGLE ½°		UNIT	mm	PART NAME	R SPEC DRAWING	DWG NO
4			DRAWN BY	张斌	DESIGNED BY	张斌	SCALE	5/4			S8143A
3											
2			CHECKED BY		APPROVED BY		DATE	2020.07.20	PART NO	R-260C6W-NBBA-11ANC	
1 2020.07.20	首次出图	张斌									