嘉尼企業股份有限公司CANAL ELECTRONIC CO.,LTD.

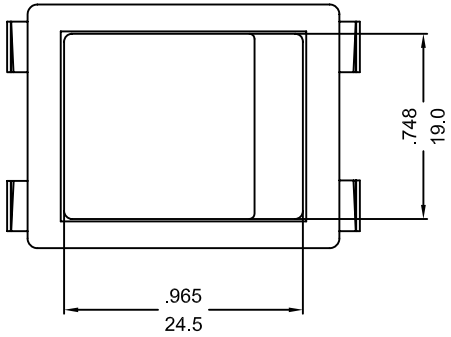

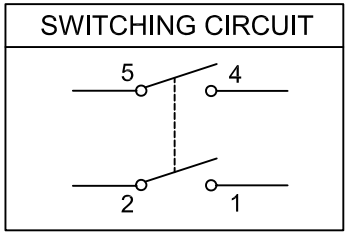

ROCKER SWITCH MODEL: R SERIES

RATING:8[128] 250V~ (cURus/ENEC15)
16(4)A 250V~T125/55 (CQC)
DIELECTRIC WITHSTAND VOLTAGE: 1500VAC 1 MINUTE
INSULATION RESISTANCE:500VDC 100MΩ (MIN.)
CONTACT RESISTANCE:20mΩ INITIAL(MAX.)

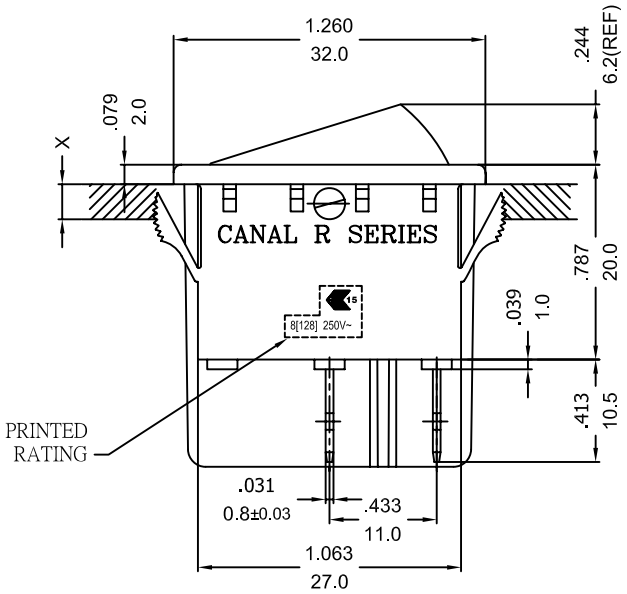

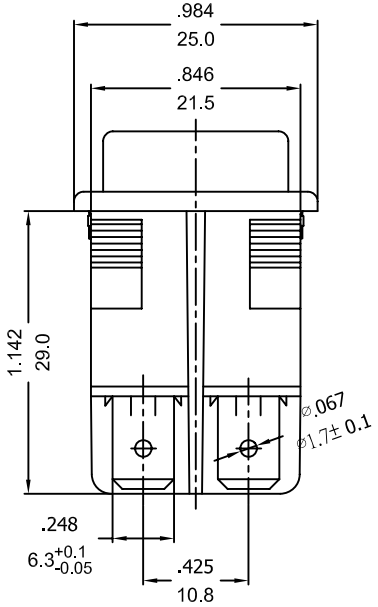

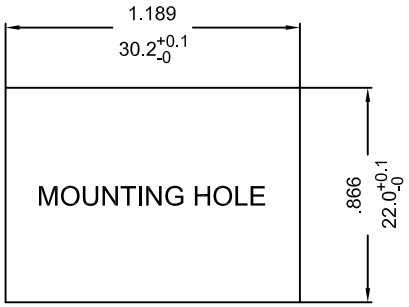

X=(0.75~1.25mm)
PANEL THICKNESS

NOTE:TOLERANCES UNLESS OTHERWISE SPECIFIED:± .012/0.3 (in/mm)

REVISION	DESCRIPTION	REVISED BY	TOLERANCES				ANGLE ½°	UNIT	mm	PART NAME	R SPEC DRAWING	DWG NO
4			DRAWN BY	达志各	DESIGNED BY	蔡劍	SCALE	5/4				S7587A
3												
2			CHECKED BY		APPROVED BY		DATE	2018.09.14		PART NO	R-210F2N-NBBF-1FNNC	
1 2018.09.14	首次出圖	达志各										